Random Access Memories

Static RAM

Transistor efficient methods for implementing storage elements

Small RAM: 256 words by 4-bit

Large RAM: 4 million words by 1-bit

We will discuss a 1024 x 4 organization

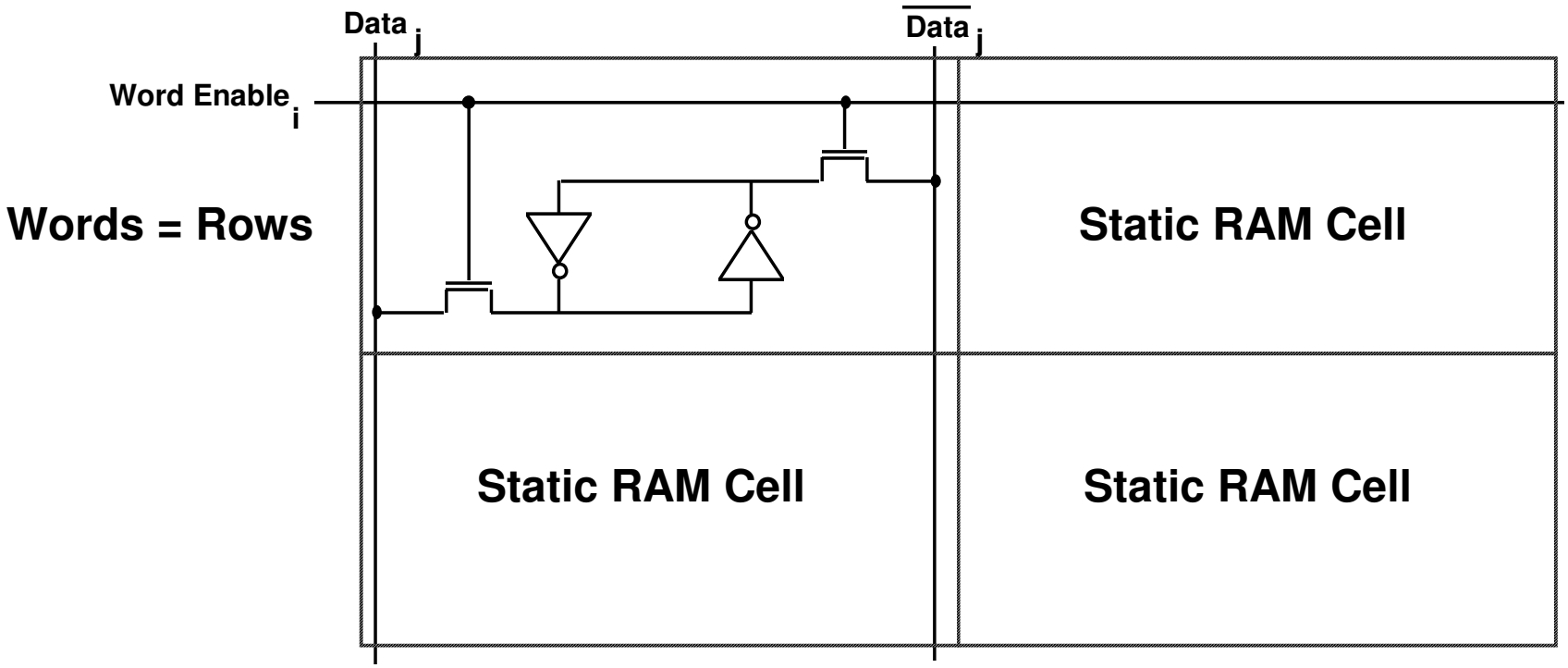

Columns = Bits (Double Rail Encoded)

Random Access Memories

Static RAM Organization

Chip Select Line (active lo)

Write Enable Line (active lo)

10 Address Lines

4 Bidirectional Data Lines

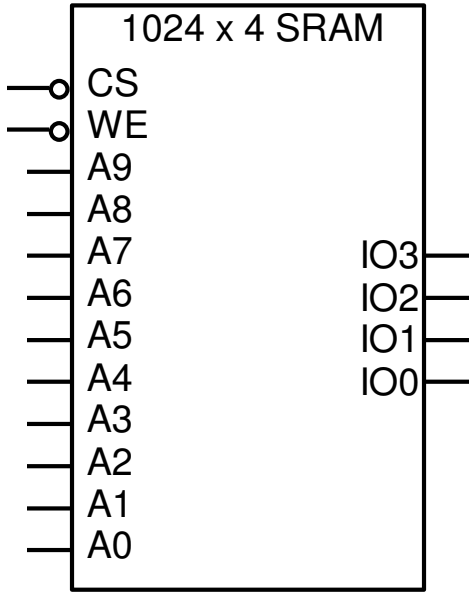

Random Access Memories

RAM Organization

Long thin layouts are not the best organization for a RAM

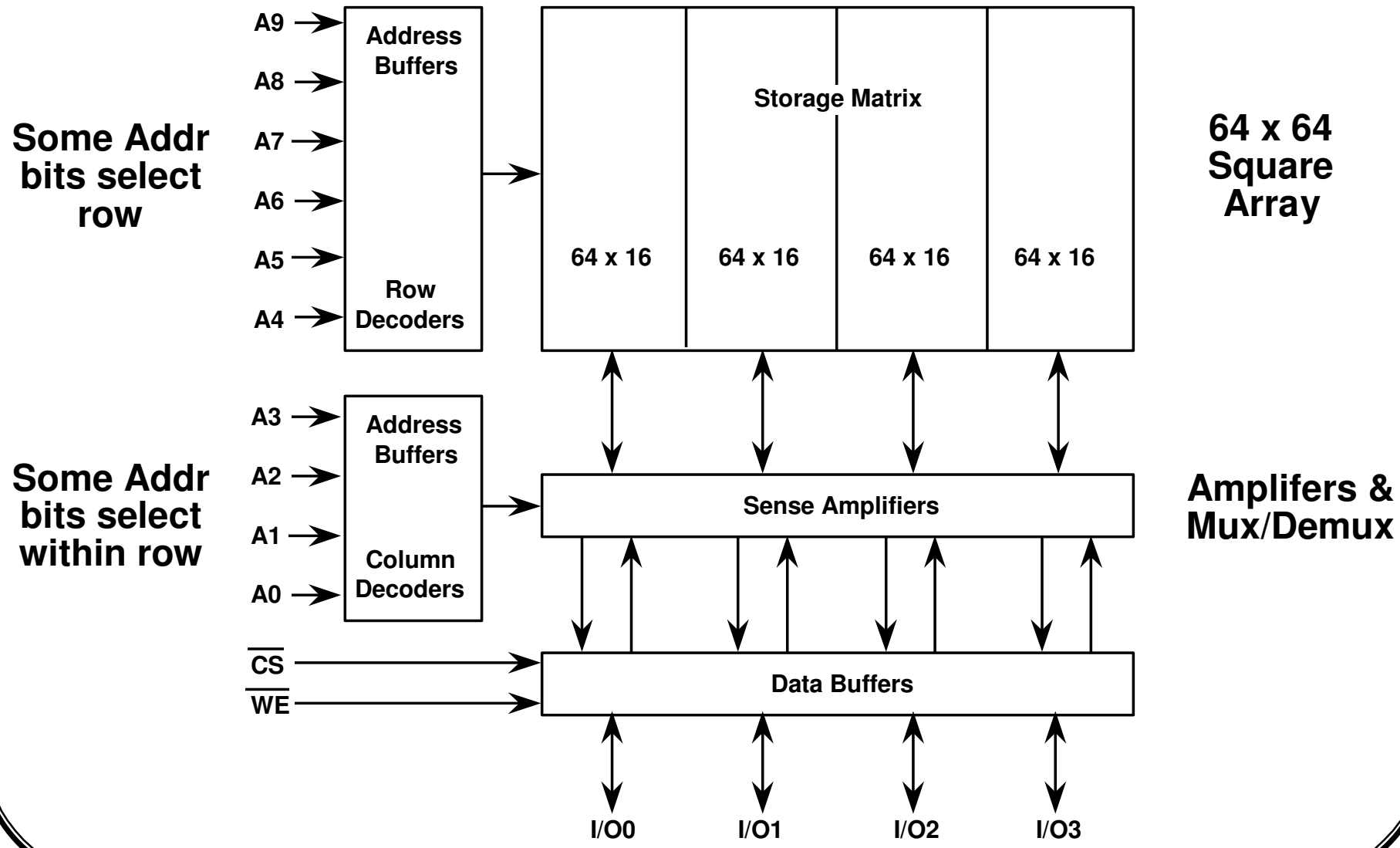

Random Access Memories

RAM Timing

Simplified Read Timing

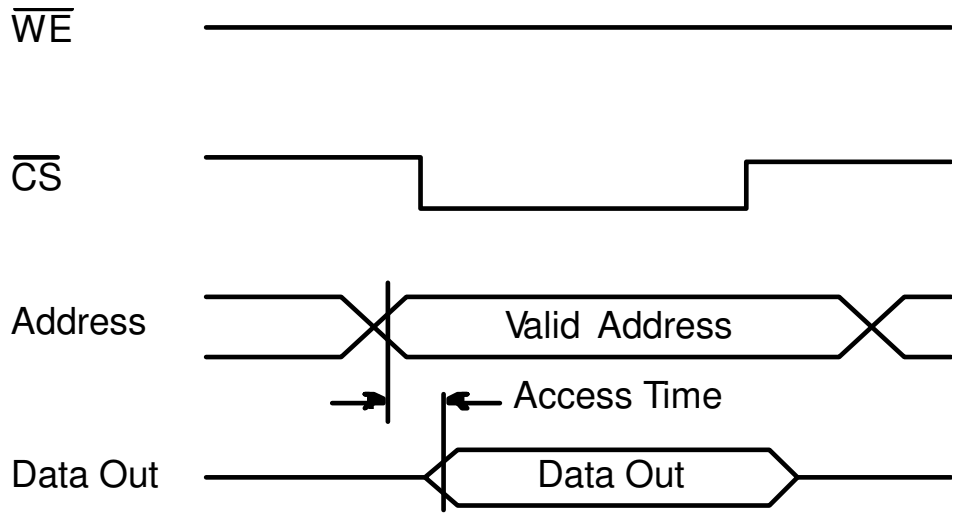
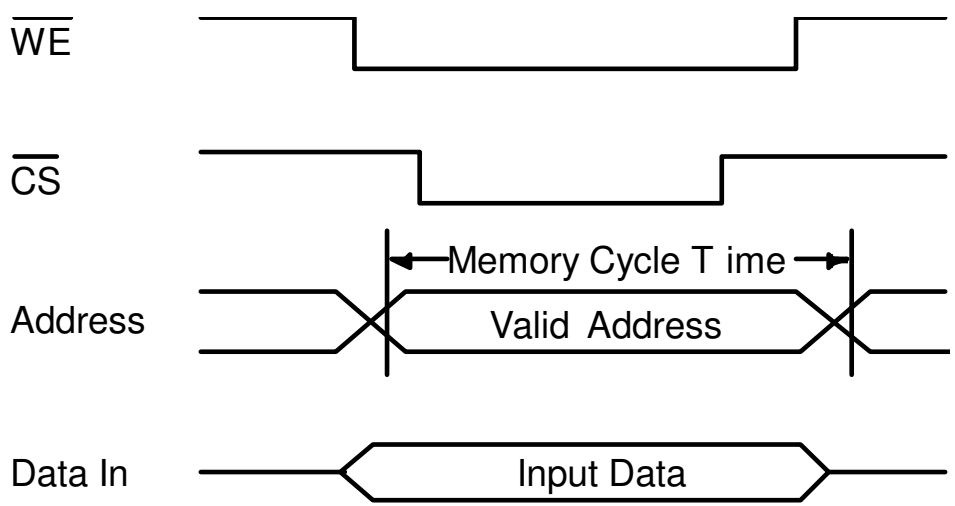
Simplified Write Timing